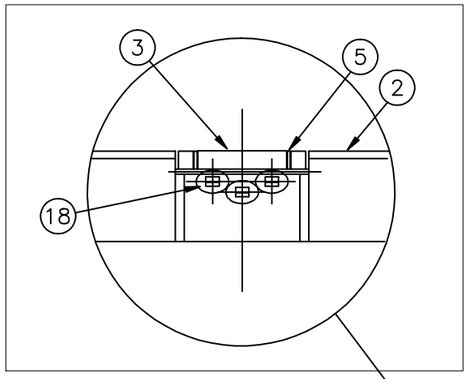

INSTALLATION NOTES

1. ACCESS HATCH UNIT WITH THE LID & BASE FRAME SECURELY LOCKED TOGETHER TO BE LAID LOOSELY ON CONCRETE APRON AND CHECKED FOR LEVEL USING MINIMUM SHIMMING.
2. AFTER INITIAL LEVELING, ALL OTHER BOLT DOWN POINTS MUST BE SHIMMED TO ENSURE NO DISTORTION OF THE FRAME OCCURS DURING FINAL TIGHTENING OF THE HOLD DOWN BOLTS.
3. AFTER TIGHTENING HOLD DOWN BOLTS ALL VOIDS UNDER THE FRAME MUST BE FILLED WITH DRY PACK MORTAR.

ITEM	MATL	DESCRIPTION	QTY	MICROFILM NO.
1	MATL	DESCRIPTION	QTY	DRAWING
1	MATL	DESCRIPTION	QTY	DRAWING
1	MATL	DESCRIPTION	QTY	DRAWING
1	MATL	DESCRIPTION	QTY	DRAWING
1	MATL	DESCRIPTION	QTY	DRAWING
1	MATL	DESCRIPTION	QTY	DRAWING
1	MATL	DESCRIPTION	QTY	DRAWING
1	MATL	DESCRIPTION	QTY	DRAWING
1	MATL	DESCRIPTION	QTY	DRAWING
1	MATL	DESCRIPTION	QTY	DRAWING
1	MATL	DESCRIPTION	QTY	DRAWING
1	MATL	DESCRIPTION	QTY	DRAWING
1	MATL	DESCRIPTION	QTY	DRAWING
1	MATL	DESCRIPTION	QTY	DRAWING
1	MATL	DESCRIPTION	QTY	DRAWING
1	MATL	DESCRIPTION	QTY	DRAWING
1	MATL	DESCRIPTION	QTY	DRAWING
1	MATL	DESCRIPTION	QTY	DRAWING
1	MATL	DESCRIPTION	QTY	DRAWING
1	MATL	DESCRIPTION	QTY	DRAWING
1	MATL	DESCRIPTION	QTY	DRAWING
1	MATL	DESCRIPTION	QTY	DRAWING

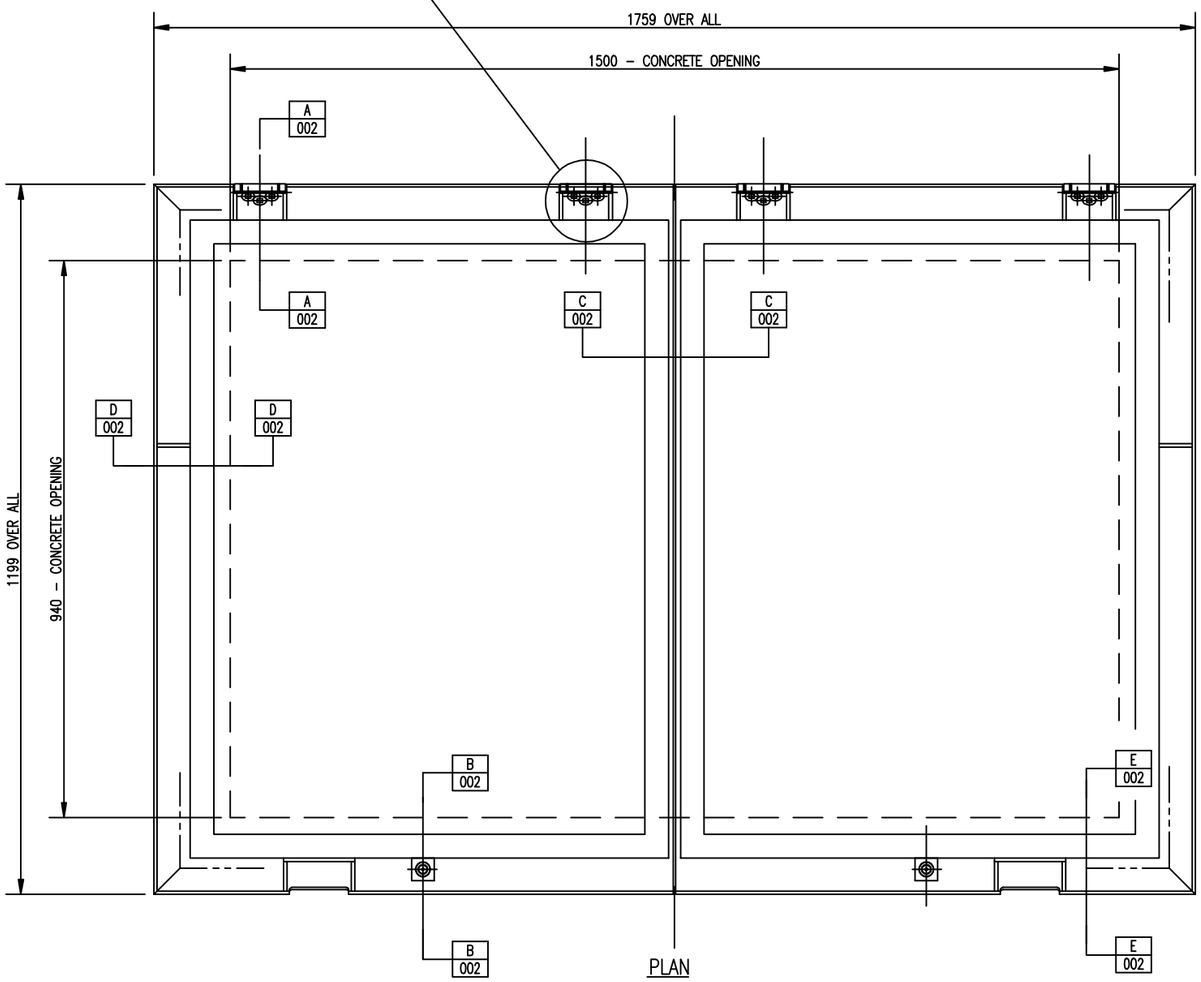

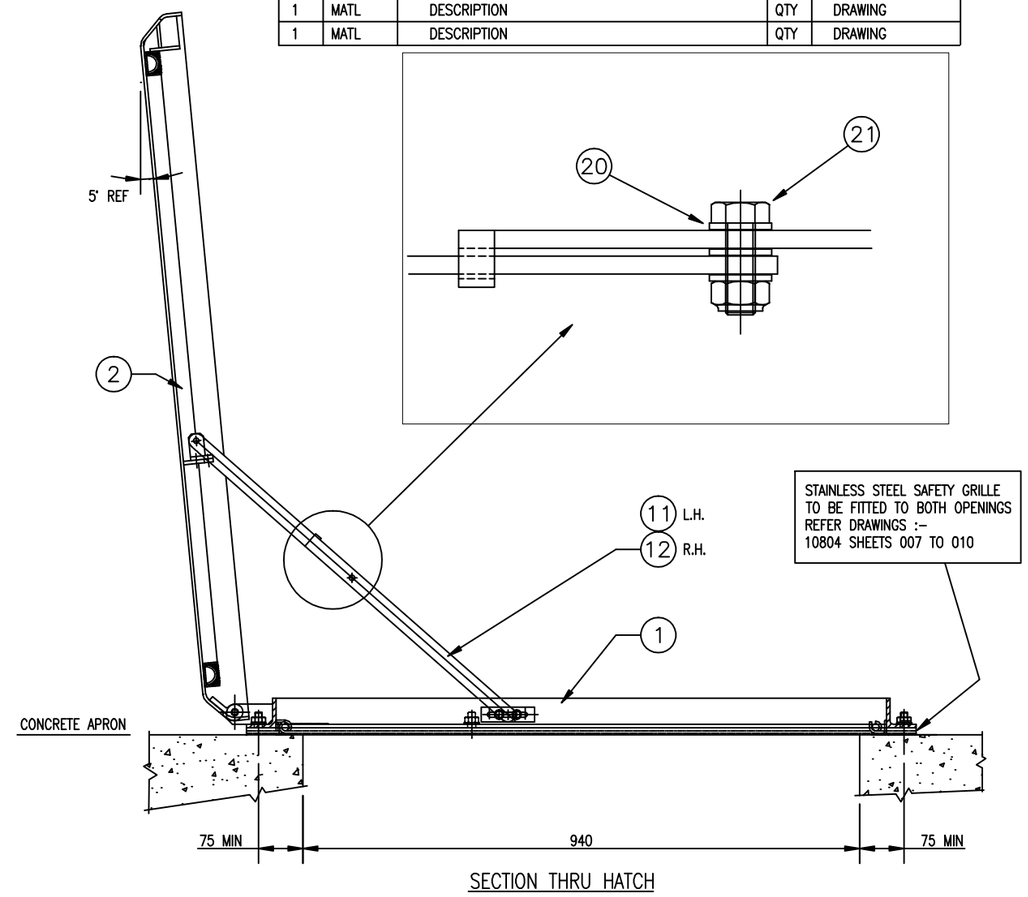

SPLIT HATCH TO SUIT FLYGT TOP–150 PUMP SUMP

MANUKAU WATER

WASTEWATER PUMPING STATION STANDARDS

STANDARD SPLIT LID ACCESS HATCH (1500X940) ASSEMBLY SHEET 1

Design and Material Standards - Manukau Water Limited

DETAIL NO: PS–14a

SCALE: 1:4 ; 1:10 @ A3

UPDATED: JULY 2006